Specifications

KAMPER MK 11

Based on the Volkswagen Transporter Kombi.

EXTERIOR DIMENSIONS:	Overall Length	4570mm (15'0")
	Overall Width	1850mm (6'0¾")
	Overall Height	2293mm (7'6¼")
INTERIOR HEIGHTS: (Roof Raised)	Over Usable Floor Area	2261mm (7'5")
	Over Upper Bed Area	750mm (2'5½")
GROSS VEHICLE WEIGHT:		2360kg (2.32 tons)
UNLADEN WEIGHT: *		1779kg (1.75 tons)
LOAD CAPACITY:		581kg (.57 tons)
BED SIZES:	Lower Bed	1854mm x 1219mm (6' 1" x 4' 0")
	Upper Bed	1829mm x 1219mm (6' 0" x 4' 0")

WATER SYSTEM: 54.5 litres (12 gallon) fresh water tank. Electrical pump with foot operated isolating switch.

GAS SYSTEM: Cupboard storage for two camping gas 907 cylinders - metric copper compression fittings and isolating taps for hotplate and refrigerator. Appliances take low pressure 280mm (11") Butane, 356mm (14") Propane.

OPTIONS AVAILABLE:

Complete Package Comprising:

1. (a) An electrically controlled blown air heater.
   (b) Second battery.
   (c) 12v control panel and charger unit.

2. Porta Potti 230.

* Unladen weight includes full petrol and fresh water tanks, two gas bottles, tools and spare wheel.

SPECIFICATION OF MATERIAL TYPE AND COLOUR

This section will assist in the correct identification of material when spares or replacement furnishing materials may become necessary.

Upholstery	-	Marseille design 20 colour C5
Mattress	-	Concord Mushroom
Curtains	-	Saville 29
Carpet	-	Pussyfoot chestnut
Wall Fabric	-	Medium flax FMC 223
Furniture Board		Alkor PVC 882/02
Worktops	-	Ginza preformed
Roof Lining	-	Calico P2945

The policy of Autohomes (UK) Ltd is one of continuous improvement. We reserve the right to change prices, specification or equipment at any time without notice. All measurements and weights are approximate only.

1 Introduction

Congratulations on choosing a Kamper Mk 11.

This Owner's Manual and Operating Guide gives all the necessary information to ensure that you get the most out of your Kamper. Further information can be obtained from any Autohomes' dealer who can also provide information on Autohomes' aftersales service.

Please consult your Volkswagen manual for information on the Volkswagen Transporter Kombi on which the Kamper conversion is based.

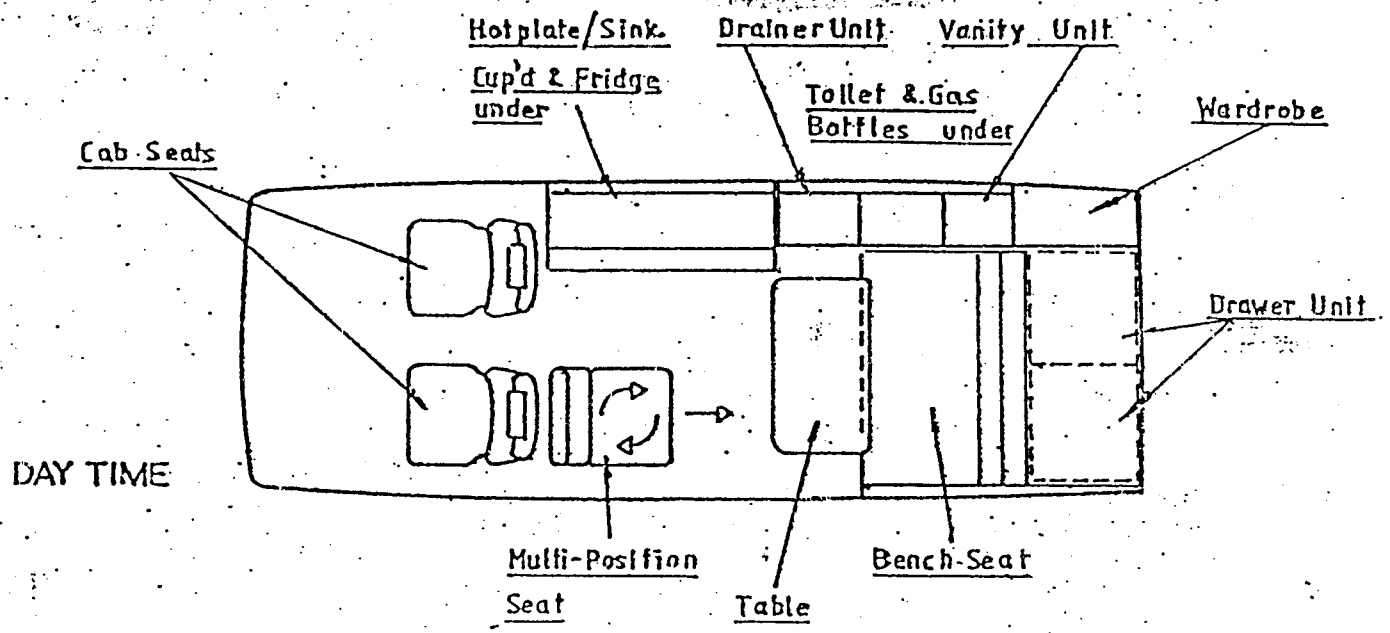

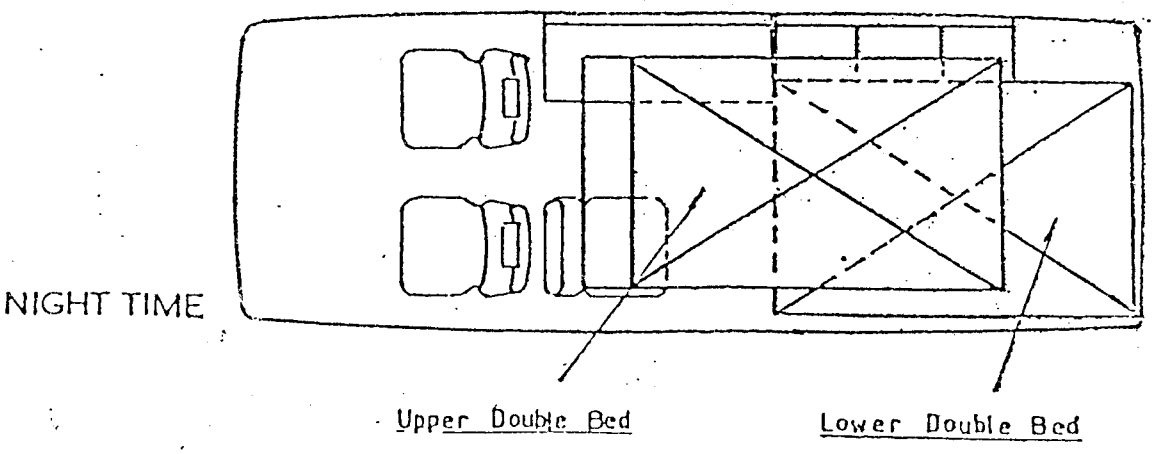

2 Internal layout

2.1 Kamper Elevating Roof

Once the vehicle is stationary the elevating roof can be raised. This will give a headroom of over 7ft over the usable floor area and 2' 5½" over the bed area.

To raise the elevating roof it is just necessary to release the front catch. The release knob is located at the front on the left hand side.

To reduce the spring tension on the catch we suggest that you pull down on the forward handle of the roof at the same time as the release knob is pulled.

Having released the catch push the front of the roof up, the gas filled struts will take over and raise the roof to its fully elevated position.

The rear lock will automatically disengage as the front rises.

The side flaps can now be positioned. Stand on the stool/storage unit provided, release the shoot bolts and lower the top flaps, now raise the lower flaps ensuring the shoot bolts have been drawn back to release the side flap locking mechanism. Before pushing the lower flap fully home raise the arm of the locking mechanism to the fully up position, push the lower flap fully home and lock in position by lowering the arm of the locking mechanism to the stowed position and retain in place with the shoot bolt.

Should it be desired one or both of the top flaps may be left in the stowed position thereby greatly increasing the ventilation. The lower flaps can still be locked into the upright position as described above.

Lowering the roof is the reverse of raising, unlock and lower the bottom flaps, raise the top flaps and lock in the stowed position. Bring the roof cap down by pulling firmly on the handles provided, the front will come down first, followed by the rear. Should the roof not lock down first time, raise the front of the roof about 6 inches and lower smartly, the lock should then engage. Both the front and rear locks will engage automatically.

Do not try to pull the roof down too quickly, as the gas struts will control the rate at which the roof can be lowered.

NEVER DRIVE WITH THE ROOF RAISED AS THIS COULD RESULT IN DAMAGE AND WOULD INVALIDATE THE WARRANTY.

2.2 Seating Arrangement

The Kamper can carry up to six people, utilising the forward facing bench seat, the versatile multi-position, sliding, revolving and reclining seat and the two cab seats.

2.3 Table

The free standing table is normally stored behind the back of the bench seat.

The table may be lifted into the dinette area either over the top of the bench seat back or removed through the rear of the vehicle after raising the tailgate.

2.4 Dinette

The dinette will seat four people using the bench seat, and the swivel seat.

The table is positioned in front of the bench seat and the swivel seat slides fully aft on the fore and aft slide, pivot the seat so it is facing the nearside and then lower the seat back to the horizontal position. It is important to position the stool/ storage unit under the seat back to support the weight of the person sitting on it.

2.5 Stool/Storage Unit

As described previously the stool/storage unit fulfills many roles. It is a stool when raising and lowering the roof, and a support for extending the dinette seating.

It has a hinged top so it can be used as a storage-unit and when travelling it can be positioned between the cab seats to provide more room for all those items required near at hand.

It will also provide an extra small seat either inside or outside the vehicle.

2.6 Sleeping Layout

Two upholstered double beds are available. The lower bed is made by converting the bench seat. If carrying out the conversion for the first time, it would be advantageous to locate the position of items which will be referred to in the conversion instructions.

The support cam is located under the front of the seat base and is attached to the top of the vertical panel in the centre. Its purpose is to support the back edge of the seat base when it forms part of the double bed.

The support leg is located under the seat base just behind the front stiffening rail. It is held in its stowed position by a shoot bolt, when released the leg will pivot down to a vertical position where it provides support for the corner of the bed.

The handle loops are located on the top and bottom of the seat back, the one on the top of the cushion is visable but the bottom one is hidden by the seat base. The loops provide an easy method of moving the seat back.

Both the seat base and back are moved by means of pivot arms attached to the underside of the seat base and the back of the seat back.

To convert to a double bed proceed as follows. First release the two shoot bolts at the rear of the seat back, now lift front of seat base to give access to the support cam, turn the cam one quarter turn so that it stands proud of the top edge of the vertical panel, also release the shoot bolt retaining the support leg. Pull seat forward so that it swings on its pivot arms up and over into its bed position, ensure the leg is correctly positioned to support the bed.

By leaning over, or kneeling on the seat base, locate the bottom hand loop of the seat back, pull the bottom towards you and the cushion on its pivot arms will swing into position between the front and rear cushions, and locate on the support cleat protruding from the back of the seat base. Tuck the hand loops between the cushions and the bed is now ready.

To revert back to a bench seat reverse the above procedure. Locate the hand loop at the top (rear) of the seat back cushion lift and swing the seat back into its seat position ensuring its correct location against the two side stops. Swing the seat base back into almost its final position but before lowering the front down re-stow the support leg and turn the support cam so its edge is flush with the vertical panel top edge.

The upper double bed large mattress is already in position. To complete the bed, release the shoot bolt retaining the two extension panels stored over the cab, pull out the panels and position adjacent to the fixed part of the bed. Lock the panels in position with the shoot bolt on the forward face of the front panel.

To assist in gaining access to the upper bed we recommend the following procedure is adopted.

The two additional small mattresses and sleeping bags are placed on the main part of the bed. The two bed extension panels are pulled out only far enough to separate the two panels. This is achieved by lifting the front of the rear panel slightly to disengage the catches. Slide the rear panel up the main section of the bed and place one of the small mattresses on top. The frong extension panel should be left protruding from its storage space.

By using the stool/storage unit and the top of the kitchen unit gain access to the bed. When in the upper bed the front panel is pulled across and rejoined to the rear panel and the second small mattress placed in position. The upper bed is now complete.

Should the front extension inadvertantly be pushed back into its storage space it can be retrieved by pushing the rear panel back into the storage area, the two catches will automatically engage and both panels pulled out again.

2.7 Kitchen Unit

The kitchen unit consists of a stainless steel combination sink and hotplate - the whole covered with a heat resistant worktop.

To gain access to the sink and hotplate lift the worktop to its vertical position, raise the hotplate heatshield and retain in

position with the small clip on the inside of the worktop, lower the front flap of the worktop so that it engages on the heatshield and this forms a shelf which can be used for cooking utensils and condiments.

The lower part of the kitchen unit houses a refrigerator and a cupboard.

To the right of the sink unit is the storage unit, the top of which provides additional heat resistant worktop space.

Beneath the forward hinged top of the storage unit is the drainer tray, this is used in the same way as a draining board, it has its own waste outlet which carrys the waste water to the outside of the vehicle.

2.8 Storage Space

Storage is provided by the kitchen unit cupboard and refrigerator, the storage unit with separate cutlery storage, a vanity unit with mirror and large cupboards with sliding doors. Beneath the left hand cupboard is further storage for the in-use gas bottle and 230 Porta Potti if fitted.

To the rear of the storage unit is the wardrobe with access via the door or the vehicle tailgate.

Behind the bench seat, underheath the rear cushion are a pair of drawers with access again via the tailgate. An alternative method of reaching the drawers contents is by removing the rear cushion and lifting the ply tops.

The overhead lockers with drop down doors are provided, one at the rear and one on the offside.

Further storage is available in the base of the swivel seat and the stool/storage unit.

2.9 Ventilation

Ventilation is provided for by the sliding window on the offside and the wind up rooflight with built-in flyscreen in the elevating roof.

Additional ventilation for those very hot days can be achieved by leaving one or both of the top side panels in the stowed position as described in 2.1. The cab door windows can also be utilised to increase the ventilation.

2.10 Insulation

The Kamper insulation gives protection from extremes of hot and cold and minimises condensation. The body sides have insulating glass fibre fitted where access is available, covered by the cloth inner wall linings.

The double skinned construction of the roof cap and the elevating roof sides are also insulated.

2.11 Cab Curtains

Always ensure the cab curtains are stowed clear of the seat belts so they will not interfere with the correct operation of the belts. This

This can be achieved by positioning both of the curtains behind the passenger seat and retaining them in this position with the curtain ties located around the passenger head rest supports.

2.12 Engine Access

To gain access to the main engine cover at the rear of the vehicle, first remove the rear cushion and slide out the complete drawer assembly.

3 Operating Instructions

The appliances in your Kamper are supplied by Europe's foremost manufacturers. Before using them, you should study the information contained in this section, and any other accompanying operating instructions. All warranty certificates should be completed and returned (if required) to the relevant manufactuers.

3.1 Electrical System

The electrical supply for the internal lighting, water pump, the 12 volt circuit of the refrigerator is taken from the vehicle battery. The refrigerator is wired through the ignition switch.

3.1.1 Vehicle Battery Location

The battery is located inside the vehicle behind the drivers seat.

3.2 Water System

A 54.5 litre (12 gallon) fresh water tank is located under the bench seat with the external filler on the offisde of the vehicle. The waste water from the sink is fed to the underside of the vehicle via a plastic hose. The water system will have been operated and checked before leaving the factory and again by the dealer before delivery to you, so there could already be water in the system.

The large access cap can be removed to allow you to clean the inside of the water tank.

3.2.1 Water Pump

Water is fed to the sink by an immersible electric pump which is fitted inside the water tank. The pump is operated by depressing the foot switch located on the floor in front of the kitchen unit. If the flow of water from the faucet stops, release the foot switch as the tank has run dry.

Should you wish to remove the pump for cleaning or servicing, first gain access to the top of the tank by pivoting the bench seat base forward into the bed position, disconnect the electrical lead wires at the bullet connectors adjacent to the access cap. Carefully remove the large access cap through which the electrical wire and water pipe enter the tank. Feed the wire through the cap; the pump can now be disconnected.

3.3 Gas System

If the optional toilet is not fitted then both the gas cylinder which is coupled to the system and the spare may be located in the cupboard under the storage unit. If the toilet is fitted then the spare cylinder can be stored in the storage unit at the rear end adjacent to the wardrobe. Appliances will take low pressure 280mm (11") water gauge Butane or 356mm (14") water gauge Propane.

Gas containers and regulators are not supplied with the vehicle but we recommend the use of Camping Gas No 907 containers, and a Camping Gas horizontal regulator tap part No 080794.

To connect any of the above cylinders to the vehicle gas line, a length of Neoprene hose 5/16" bore and 1/8" wall (British Standard 3212 Part 1) will be required.

GAS BOTTLES SHOULD BE TURNED OFF WHILST THE VEHICLE IS IN MOTION OR UNATTENDED. COOKING APPLIANCES SHOULD ONLY BE USED WHEN ADEQUATE VENTILATION IS PROVIDED AND NEVER FOR HEATING THE VEHICLE.

3.4 Interior Lighting

Lighting is provided by two transistorised fluorescent lights, one over the kitchen unit and one in the upper bed area. One spot light on the forward face of the wardrobe, and a courtesy light that can be operated independently of the sliding door.

The fluorescent lights are extremely economical 12 volt fittings which use only ¾ amp per hour. To change the fluorescent tubes, unscrew the nut from the switch, remove the end cap and slide off the cover.

The spot light uses car type bulbs 12 volts 10 watt. To change the bulb in the courtesy light refer to the VW handbook.

3.5 Hotplate and Grill

3.5.1 Hotplate

Both burners can be used for fast boiling or simmering and are controlled by safety taps of the self-locking type.

When lighting a burner, always make sure you apply a lighted match or taper before turning on the gas. With lighted match in position push i- the tap and, keeping it depressed, turn it as far as possible in an anti-clockwise direction to the FULL ON position.

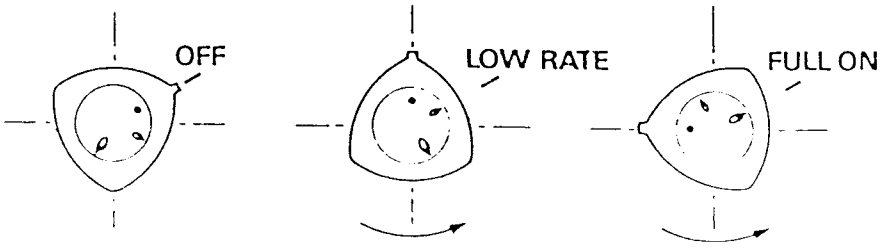

When turning a tap from the FULL ON to the simmer range, DO NOT PUSH THE TAP IN, slowly turn clockwise until the tap springs out, this indicates the top of the simmer range. This is an added aid which allows you to feel that a simmering range has been reached without looking at the flame on the burner. By turning further clockwise, a smaller flame can be obtained when required. To turn OFF, push in tap and turn clockwise to OFF position, when a stop will be reached; then release and the tap will spring out.

3.5.2 Grill

The operation of turning on the gas is the same as for the Boiling Burners (see above).

Whilst the grill is heating up, place the empty grill pan under the lighted burner to protect the lining. When the grill has heated up, remove the grill pan, load the pan and place in cooking position.

3.5.3 Cleaning

To keep this appliance in good condition it should be cleaned as soon as possible after use.

The stainless steel sink unit and the burner heads should be cleaned with warm water and degergent using a soft cloth, or a NON-abrasive liquid cleaner. Stubborn stains can be removed by 'Duraglit' or similar products.

DO NOT use harsh abrasive cleaners, steel wool or cleaning powders.

3.5.4 General Notes

1. When the grill is in use always ensure that the front of the grill compartment is not covered up, the hinged flap should always be in the down position.

2. When the appliance is in use it is recommended that a window or rooflight is opened for ventilation purposes.

3.6 Refrigerator

3.6.1 Introduction

This unit can be operated from either the bottle gas or the vehicle 12 volt system. The 12 volts supply is automatically fed to the refrigerator when the vehicle ignition is switched on. Therefore, it is most important to turn off the gas supply to the refrigerator before starting the engine. Should it be required to disconnect the 12 volt supply, a plug and socket is located in the cupboard next to the refrigerator. It is also most important to change over to the gas supply when the vehicle is to be parked for more than a short time.

When the vehicle is at rest for more than about half an hour it must be levelled in both directions, so that the ice-tray shelf inside the frozen food storage compartment is level. (This can be checked with a small spirit level placed on the ice-tray shelf). If it is not convenient to level the vehicle and it is to stand out of level for more than half an hour, the refrigerator should be temporarily turned off.

3.6.2 Starting the Refrigerator

Before using your refrigerator for the first time, it is advisable to wash the interior and its accessories as described later under 'Cleaning'. The bottled gas equipment includes a Piezo crystal lighting device which creates a spark over the burner when the button is pressed. No batteries or flints are required to operate the lighter.

Before starting the refrigerator, always check that the alternative method of operation is off as the refrigerator should not be operated by both means at the same time. If the caravan is to be stationary for a period, check that the refrigerator is level.

Bottled Gas Operation - Lighting the Burner

1. See that the voltage selector switch is set with 'O' against the indicator mark . Ensure that gas is available from the bottle and turn on any taps in the supply line to the refrigerator.

2. Turn the gas control knob so that MAX is opposite the indicator mark.

3. Push in fully the gas control knob for about 5 to 15 seconds to clear air from the pipe line. (When starting initially or after changing a gas bottle, it may be necessary to push in the knob appreciably longer to clear all the air).

4. Still pressing in the knob push in the button which operates the Piezo igniter, several times in succession. (A click should be heard each time the button is pressed in). Continue to press in the gas control knob for a further 15 seconds to allow time for the thermocouple tip (over the burner) to heat up.

5. Release the gas control knob then check that the burner is alight by looking directly through the flame viewer located adjacent to the control knobs. If the burner has not lit, repeat the lighting procedure.

NOTE: The refrigerator has a flame failure device which will automatically shut off the gas to the burner if the flame is blown out. When the knob is being pressed in this device is temporarily inoperative.

Electrical Operation (12 Volt operation)

The refrigerator is wired through the ignition, so the unit can only be operated when the engine is running, or the ignition switch is in the first 'on' position. However, it is important to understand that the 12 volt operation is only intended to be used while the engine is running and charging the battery, and for short periods at rest. The current drain at 12v is 8 amps.

3.6.3 Temperature Regulation

After starting up the refrigerator it will take about an hour before there are signs of cooling.

The 12v circuit is not thermostatically controlled and the cooling unit will operate all the time the refrigerator is connected to 12v and switched on. (As 12v is for use only when driving the vehicle, it is unlikely to result in over-freezing because of the comparatively short time involved. If over-freezing does occur, during long periods of travel, the refrigerator can be manually switched off periodically as experience proves necessary.

For operation on gas the refrigerator should be started off with the gas control set at MAX. This will provide suitable temperatures in the refrigerator in warm weather, but if the fresh food compartment becomes too cold, especially in cooler weather, turn the gas control knob to MID or MIN. Remember to return it to a higher setting when necessary - if the weather becomes warm again for instance.

3.6.4 Two-Position Travel Catch

The travel catch at the top of the door has two alternative positions. The first holds the door tightly closed and should be used when the unit is in use. The second position keeps the door slightly open and is intended to be engaged when the refrigerator is out of use so that air can circulate inside.

3.6.5 Defrosting

Frost will gradually form on and in the frozen food storage compartment and on the fins at the side of the compartment. It is a mistake to assume that an accumulation of frost gives a colder cabinet therefore the refrigerator should be defrosted regularly - about once a week or ten days depending on the conditions of use.

To defrost turn the gas control knob to OFF, or the voltage selector switch to '0' depending on which operation is being used. Remove the ice-tray, food, etc., wrap frozen foods in several layers of clean newspaper and place the package in a cool place.

To defrost as quickly as possible a small dish of hot water (not boiling) may be placed in the ice-tray shelf and a bowl of hot water on a cabinet shelf, changing the hot water as necessary until all forst has melted.

Do not place dishes of hot water on the bottom of the frozen food storage compartment, and do not attempt to defrost more quickly with an electric fire or other form of heat as this may damage the plastic surfaces.

Defrost water will run via a tube at the back into a drip collector fixed to the rear of the refrigerator, where it will evaporate into the circulating air.

When all forst has melted wipe dray the frozen food storage compartment and cabinet interior, then re-start the refrigerator setting the gas control knob or voltage selector switch and thermostat knob to their respective positions.

Replace the fresh and frozen food but wait until the cabinet has cooled down again before making ice.

Remember that if the temperature of forzen food is allowed to rise unduly during defrosting, its storage life may be shortened.

3.6.6 When Not In Use

Whenever your refrigerator is to be out of use for a period, turn off the gas. Empty the cabinet and defrost as described earlier. Clean and thoroughly dry the interior and accessories and leave the door slightly open by engaging the alternative position of the travel catch. If this is not done, the air inside may go stale giving rise to an unpleasant odour which could be difficult to remove at a later date. Empty and dry the ice-tray.

3.6.7 Maintenance

For maintenance instructions see the manufacturers operating instructions.

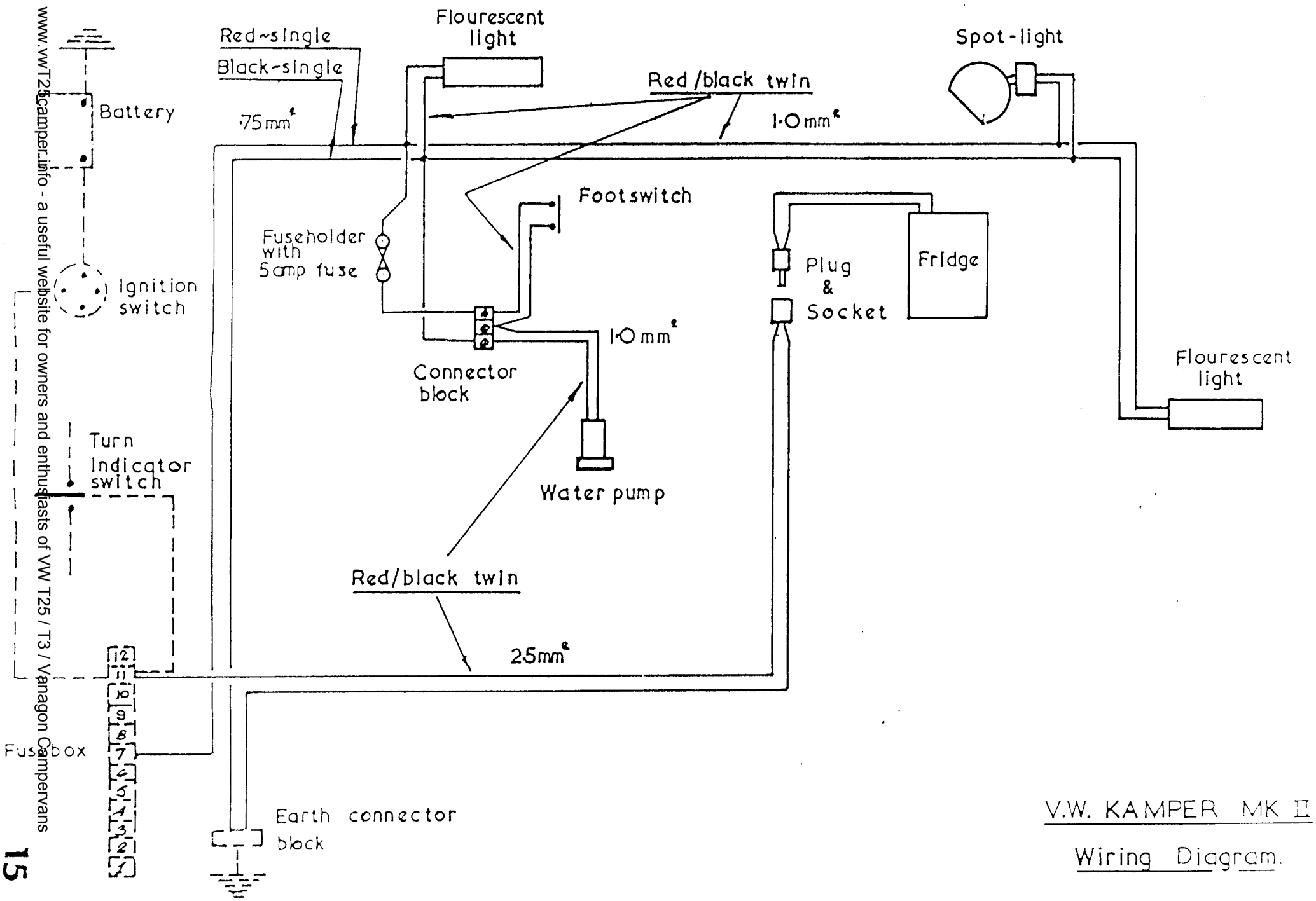

V.W. items shown dotted.

4 Optional Heater Pack

Comprising a safe blown air heater, secondary battery and an electrical control panel incorporating a charger unit.

4.1 Blown Air Heater

The heater unit is fitted outside of the living area beneath the vehicle floor on the offside. The heater unit is ducted into the vehicle interior via ducting through the floor of the sink unit, with the outlet in the plinth under the cupboard door.

The air for both heating and combustion is taken from outside with the combustion exhaust discharging through the special outlet just forward of the offside rear wheel.

The heater gas control tap is located in the kitchen unit cupboard and the electrical on/off switch to the right of the Zig control panel.

To start the heater turn on the gas supply, and put the electrical switch to 'ON'. The starting cycle is then completely automatic.

The heater unit and its air intake and exhaust are fitted outside the living area of the vehicle for safety and therefore fresh air ventilation is only necessary for personal comfort and to reduce condensation.

IMPORTANT -	THIS HEATER MUST NEVER BE OPERATED WHEN THE VEHICLE IS IN MOTION

4.2 Second Battery

Located in the recess behind the passenger seat. To gain access slide the passenger seat forward and raise the hinged metal lid.

The second battery is used to operate the body electrics, i.e. lights, water pump, heater and refrigerator.

4.3 Control Unit

The addition of the control unit to the Kamper provides additional facilities, central control of 12 volt systems and the ability to charge the secondary battery from an outside 220/240 volt supply.

With the exception of the heater and refrigerator all other 12 volt units are fed via the control panel.

4.3.1 When Travelling

Whilst travelling the control unit charging switch should be in the 'CAR' position. Both batteries will then be charged by the vehicle alternator.

The refrigerator will also be supplied with 12 volt via the ignition switch. It is therefore necessary for the refrigerator control to be set to 12 volts.

4.3.2 When Static

When 'On Site' the control unit charging switch should be switched to 'MAINS'. This will ensure that any 12 volt current will only be drawn from the secondary battery. If for any reason the secondary battery will not operate the 12 volt equipment then it is possible to run the equipment from the vehicle battery by switching the charging switch to 'CAR'. Use of the vehicle battery in this condition should be restricted to avoid flattening the battery below the level for starting the engine

If the vehicle is connected to a 220/240 volt supply via the control unit the switches should be positioned as follows - Mains switch 'ON', charging switch to 'MAINS'. In this condition the secondary battery will automatically be charged as required. It is not possible to chargethe vehicle battery through the control panel.

The refrigerator should also be switched to LP Gas. It should never be left on 12 volt supply when static as this will very quickly drain the battery.

4.3.3 Using the 12 volt Equipment

Turn on the 12 volt switch on the control unit. The battery condition indicator will light either red or green depending on the state of the battery (see 4.3.4) and the 12 volt equipment will be operative.

4.3.4 The Battery Condition Monitor

The purpose of this device is to warn that the caravan battery is becoming discharged. The red light will glow when the battery voltage is below 11volts, above this voltage the green light will glow. No harm will come to the system or the battery if the accessories are used when the red light is on, and it will be found that possibly another few days reserve of current is available after the red light first appears. A true reading will only be given when all the 12 volt equipment is switched off and when neither charging system is in operation. Thr red light may come on when an appliance is switched on, this is normal - current surges cause momentary voltage drop. It is important to remember that the battery monitor is not a charging indicator. The fact that the green light is on does not mean that the battery is fully charged. Even with a flat battery the green light will glow if either charging system is operating due to the high terminal voltage present at the battery.

NB: When using current from the vehicle when the charging switch is in the 'CAR' position, the red light may glow. This is due to voltage drop between the batteries.

4.3.5 The Fuses

There are four fuses fitted to the control unit. The mains fuse is fitted in the smaller of four fuseholders on the front panel and is rated at 1 amp; it is a standard 20mm x 5mm glass quick blow fuse. This fuse holder can only be removed with a screw-driver (this is to comply with electrical safety regulations).

The three 10 amp fuses mounted on the right of the panel protect the various accessories connected to the control unit and are standard 1 1/4" glass quick blow fuses. Access to the fuses is by turning the holder 1/4 of a turn in the direction of the arrow.

All fuses are available world wide from electrical and radio dealers. Under no circumstances should a fuse of a different type of value be fitted.

The three 10 amp fuses protect the following items -

Top Fuse	Heater
Centre Fuse	Fluorescent strip light over sink, water pump
Bottom Fuse	Fluorescent strip light in roof, spot light

Additional fuses to the above are fitted as follows -

2 x 35 amp fuses adjacent to the batteries to protect against incorrect polarity.

1 x 15 amp fuse in the battery box behind the drivers seat (Note - some of the early Mark 11 Kampers had this fuse fitted behind the Zig panel) to protect the refrigerator circuit.

WARNING: In the event of a fuse blowing there exists a fault in the circuit protected by that fuse, and the cause should be ascertained before replacing the fuse. It is important to remember that a fuse is fitted for the protection of the circuit and is a safeguard against fire and injury. Never remove the front panel with mains, or batteries connected. There are no user serviceable parts inside.

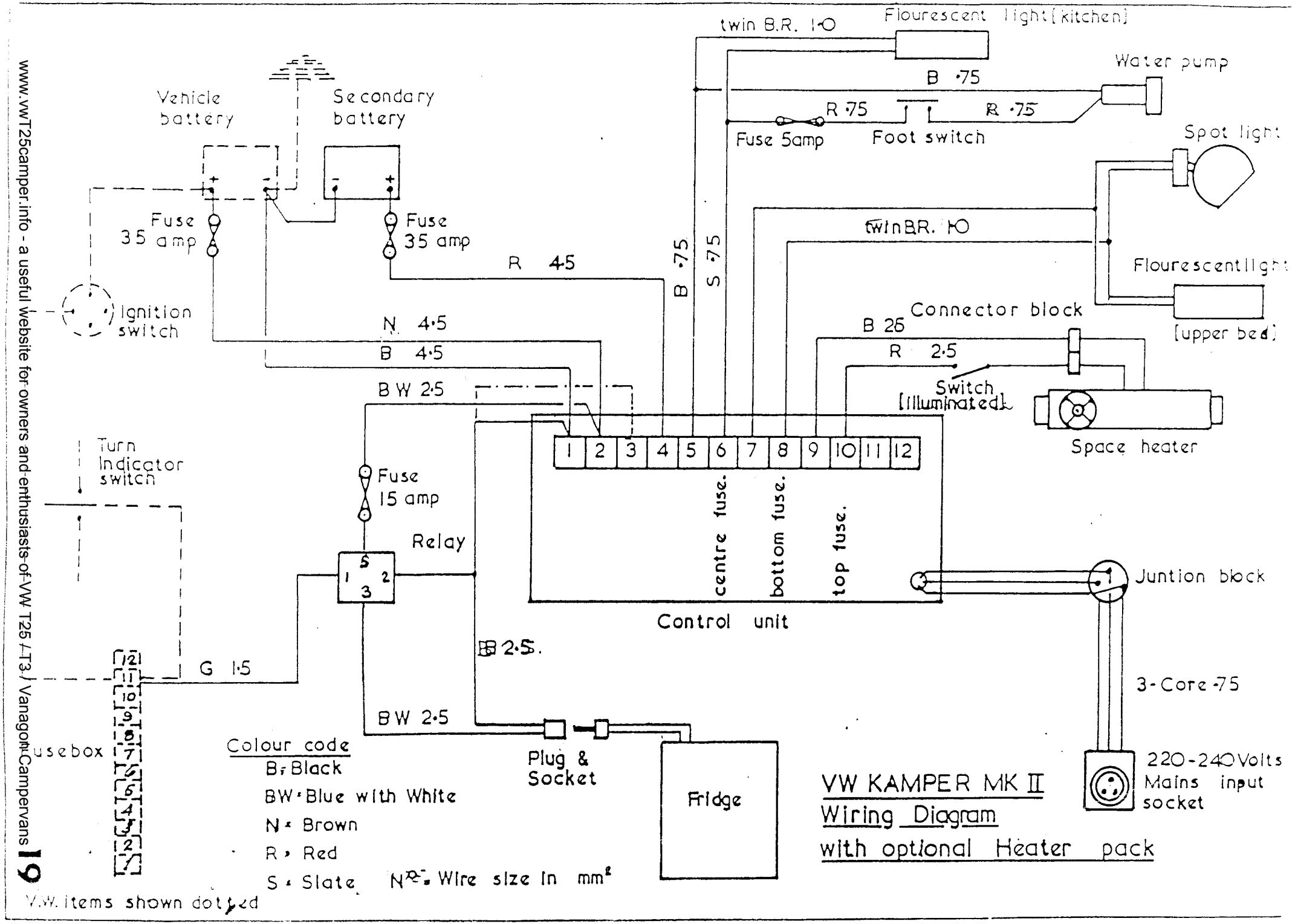

5 Maintenance

General

The working surfaces of the furniture should be cleaned with a damp cloth. The woodgrain surface should be cared for in the same way as household furniture and treated with furniture polish. Curtains should be dry cleaned rather than washed to minimise shrinkage.

Periodically check all hinges, catches and slide bolts for slack screws, tightening as required. A drop of oil on hinges and metal catches will help to keep your vehicle rattle free and in good working condition.

The exterior paintwork should be protected with normal quality car polish. It will retain its lustre providing dirt is removed by adequate washing followed by leathering before polish is applied.

If the vehicle is stored unused in a hot climate the curtains should be drawn to protect the interior from excessive heat.

We strongly advice owners to study the chassis manufacturers' handbook to carry out service and maintenance procedures according to the instructions.